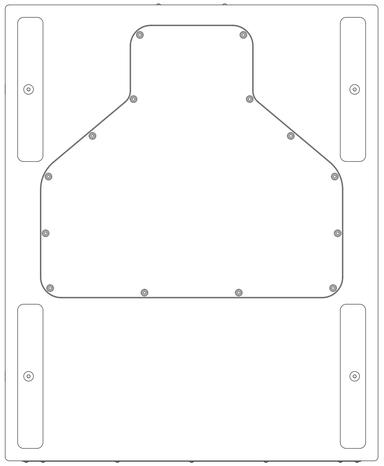

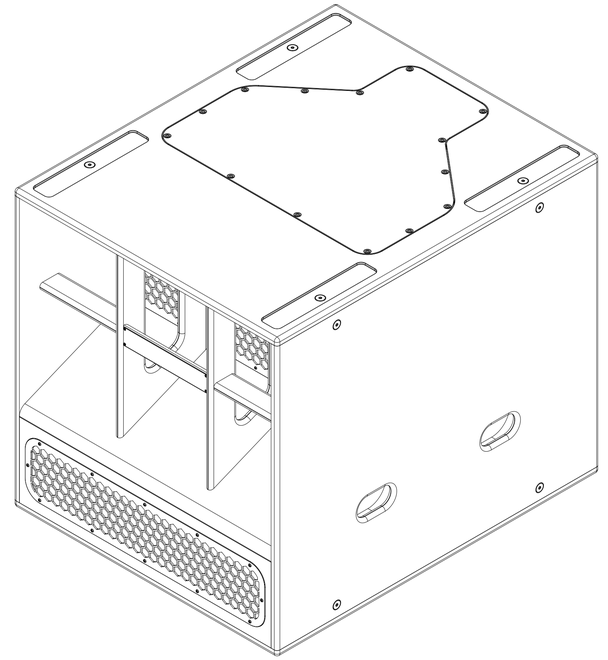

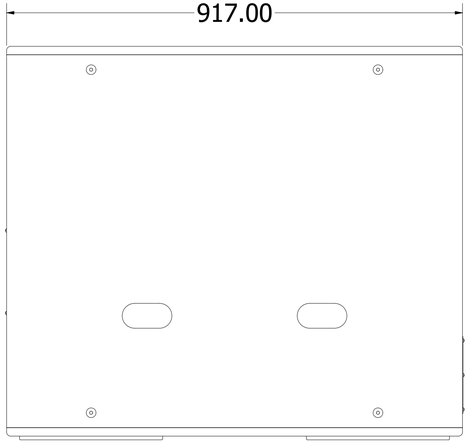

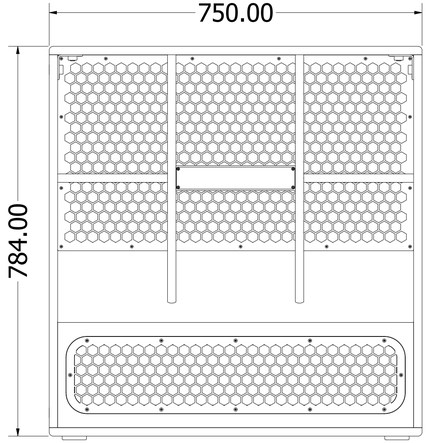

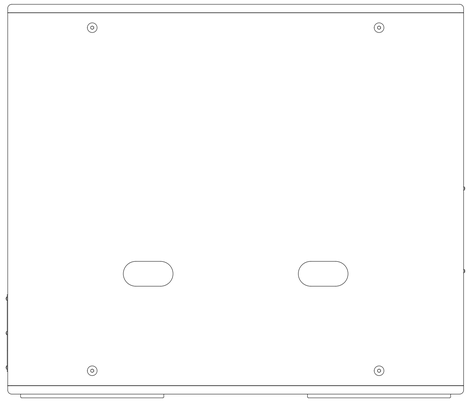

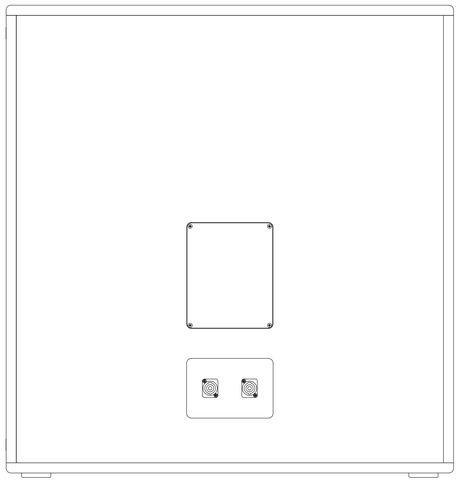

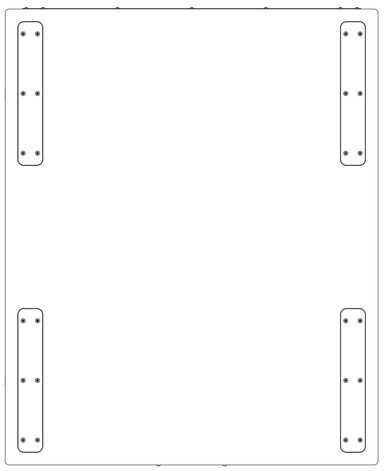

DRAWN Sarvesh	18-08-2026	Karma Electric, Bangalore - India	
CHECKED	18-08-2026	TITLE Atomik - Q21S Rev 1.0.1	
QA			
MFG	18-08-2026		
APPROVED	18-08-2026	SIZE D / DWG NO Q21S Rev 1.0.1 / REV 1.0.1	
		SCALE 1 / 6	SHEET 1 OF 1